2. Wheel Alignment

A: INSPECTION

Check the following items before performing the wheel alignment measurement.
Check items before measuring wheel alignment:

- Tire inflation pressure
- Uneven wear of RH and LH tires, or difference of sizes
- Tire runout
- Excessive play and wear of ball joint
- Excessive play and wear of tie rod end
- Excessive play of wheel bearing
- Right and left wheel base imbalance
- Deformation and excessive play of steering link
- Deformation and excessive play of suspension parts

Check, adjust and measure the wheel alignment in accordance with the procedures indicated in the figure.

Wheel arch height (front and rear wheels) <Ref. to FS-6, WHEEL ARCH HEIGHT, INSPECTION, Wheel Alignment.>
↓
Camber (front and rear wheels) <Ref. to FS-8, CAMBER, INSPECTION, Wheel Alignment.>
↓
Caster (front wheel) <Ref. to FS-9, CASTER, INSPECTION, Wheel Alignment.>
↓
Steering angle <Ref. to FS-9, STEERING ANGLE, INSPECTION, Wheel Alignment.>
↓
Front wheel toe-in <Ref. to FS-10, FRONT WHEEL TOE-IN, INSPECTION, Wheel Alignment.>
↓
Rear wheel toe-in <Ref. to FS-10, REAR WHEEL TOE-IN, INSPECTION, Wheel Alignment.>
↓
Thrust angle <Ref. to FS-12, THRUST ANGLE, INSPECTION, Wheel Alignment.>

1. WHEEL ARCH HEIGHT

1) Place the vehicle on a level surface.
2) Empty the vehicle so that it is at “curb weight”. (Empty the luggage compartment, load the spare tire, jack and service tools, and fill up the fuel tank.)
3) Set the steering wheel in a straight-ahead position, and stabilize the suspensions by moving the vehicle in a straight line for 5 m (16 ft) or more.
4) Suspend a thread from the wheel arch (point “A” in the figure below) and affix at a position directly above the center of wheel.

5) Measure the distance between the point “A” and the center of wheel.

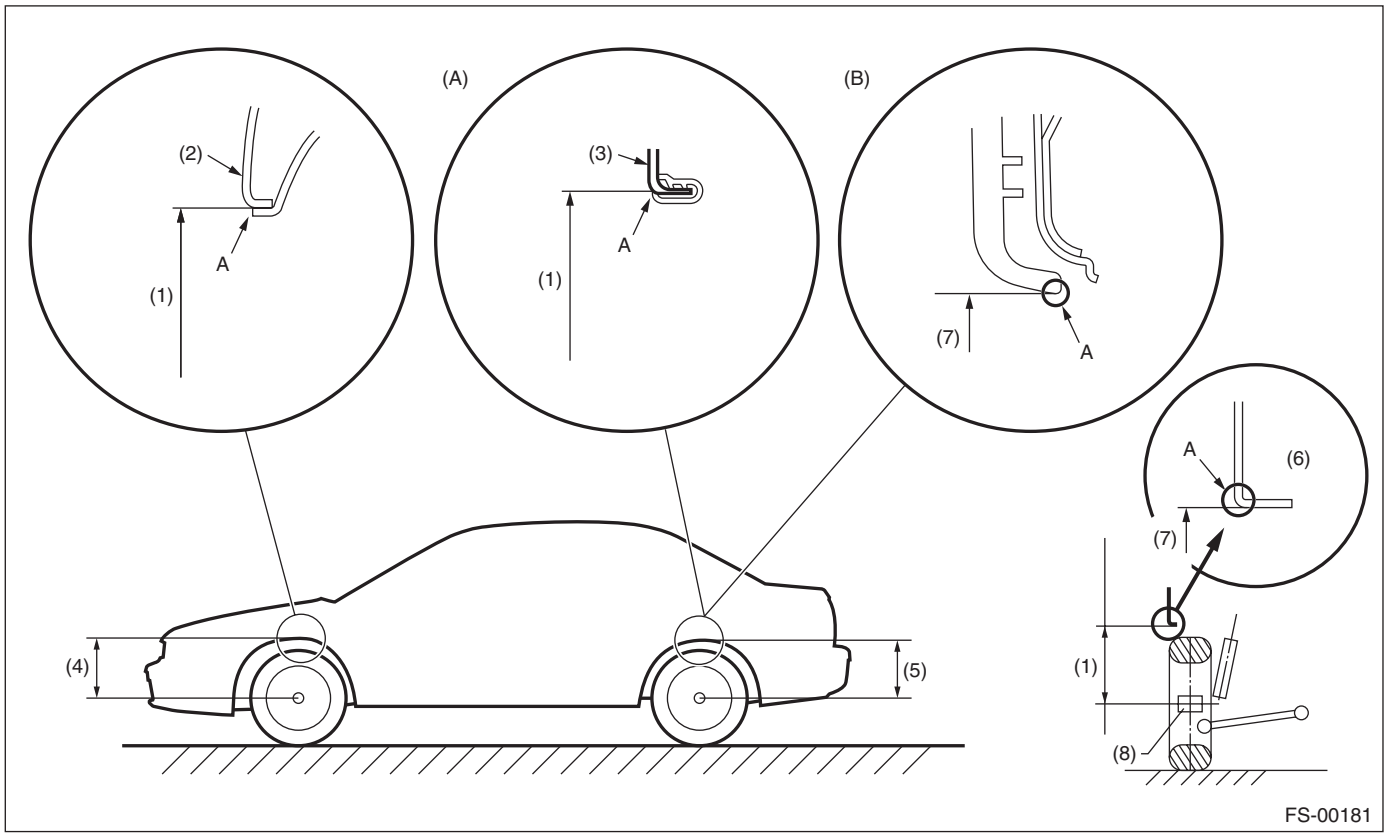

(A) Except for STI model
(B) STI model

(1) Wheel arch height
(2) Front fender
(3) Rear quarter
(4) Front wheel arch height
(5) Rear wheel arch height
(6) Flange bend line
(7) Point of measurement
(8) End of spindle

Model		Wheel arch height specification [Tolerance: $^{+12}_{-24}$ mm ($^{+0.47}_{-0.94}$ in)]	
		Non-turbo	Turbo
Sedan	Front	406 mm (15.98 in)	396 mm (15.59 in)
	Rear	381 mm (15.0 in)	376 mm (14.80 in)
Wagon	Front	397 mm (15.63 in)	387 mm (15.24 in)
	Rear	381 mm (15.0 in)	376 mm (14.80 in)
OUTBACK	Front	402 mm (15.83 in)	—
	Rear	386 mm (15.20 in)	—
STI	Front	—	386 mm (15.20 in)
	Rear	—	363 mm (14.29 in)

2. CAMBER

INSPECTION

1) Place the front wheel on the turning radius gauge. Make sure the ground contact surfaces of the front and rear wheels are at the same height.
2) Set the adapter into the center of wheel, and then set the wheel alignment gauge.

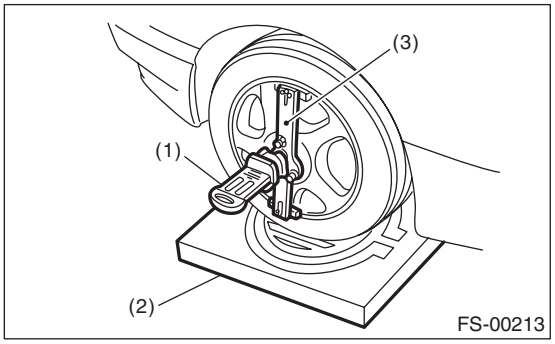

(1) Alignment gauge
(2) Turning radius gauge
(3) Adapter

3) Measure the camber angle in accordance with the operation manual for wheel alignment gauge.

NOTE:
Refer to “SPECIFICATION” for the camber angle values.
Front: <Ref. to FS-2, SPECIFICATION, General Description.>
Rear: <Ref. to RS-2, SPECIFICATION, General Description.>

FRONT CAMBER ADJUSTMENT

1) Loosen the two self-locking nuts located at the front lower section of the strut.

NOTE:
When the adjusting bolt needs to be loosened or tightened, hold its head with a wrench and turn the self-locking nut.

2) Turn the camber adjusting bolt so that the camber is set at specification.

NOTE:
Moving the adjusting bolt by one scale changes the camber by approximately 0°10′.

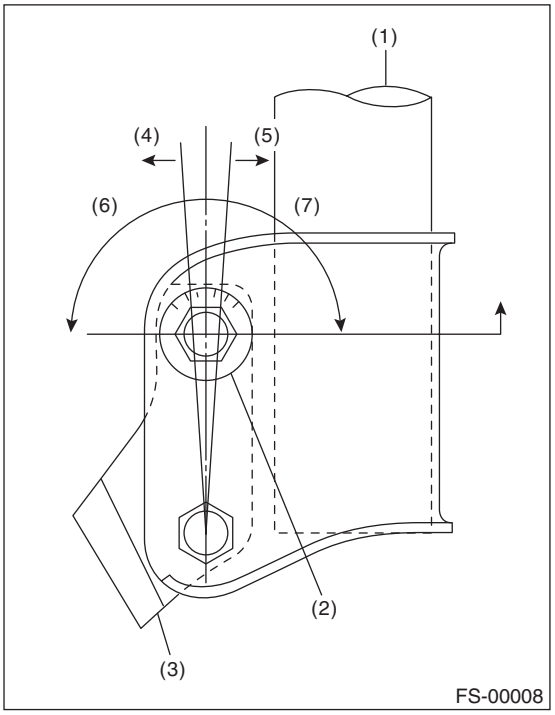

(1) Strut
(2) Adjusting bolt
(3) Housing
(4) Outer
(5) Inner
(6) Camber is increased.
(7) Camber is decreased.

To increase camber:	
Rotate the left side counterclockwise.	Rotate the right side clockwise.
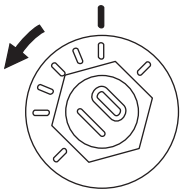 FS-00009	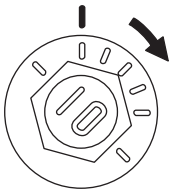 FS-00010

To decrease camber:	
Rotate the left side clockwise.	Rotate the right side counterclockwise.
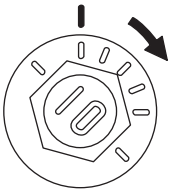 FS-00010	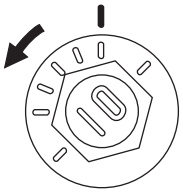 FS-00009

3) Tighten two new self-locking nuts.

Tightening torque:
175 N·m (17.8 kgf-m, 129 ft-lb)

3. CASTER

INSPECTION

1) Place the front wheel on the turning radius gauge. Make sure the ground contact surfaces of the front and rear wheels are at the same height.
2) Set the adapter into the center of wheel, and then set the wheel alignment gauge.

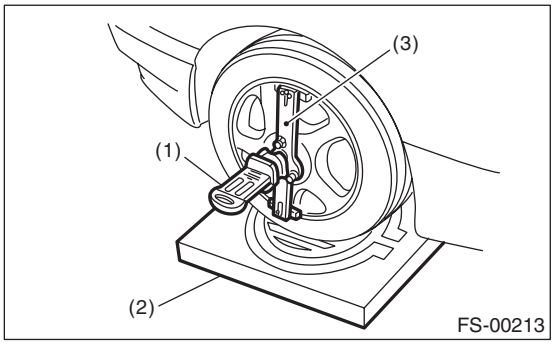

(1) Alignment gauge
(2) Turning radius gauge
(3) Adapter

3) Measure the caster angle in accordance with the operation manual for wheel alignment gauge.

NOTE:
Refer to “SPECIFICATION” for the caster angle values. <Ref. to FS-2, SPECIFICATION, General Description.>

4. STEERING ANGLE

INSPECTION

1) Place the vehicle on turning radius gauge.
2) While depressing the brake pedal, turn the steering wheel fully to the left and right. With the steering wheel held at each fully turned position, measure both the inner and outer wheel steering angles.

Steering angle:

Model	*Except for STI model*	*STI model*
Inner wheel	*34.5°±1.5°*	*32.9°±1.5°*
Outer wheel	*30.3°±1.5°*	*28.5°±1.5°*

ADJUSTMENT

1) Turn the tie-rod to adjust the steering angle of both inner and outer wheels.
2) Check the toe-in.

NOTE:
Correct the boot if it is twisted.

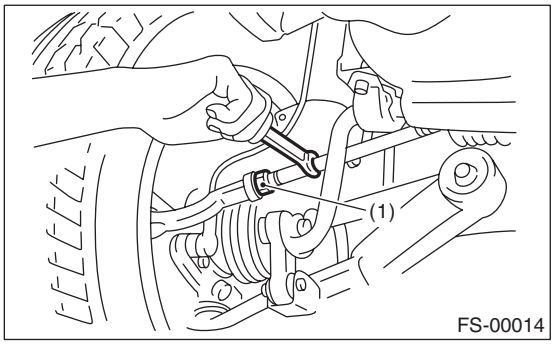

(1) Lock nut

5. FRONT WHEEL TOE-IN

INSPECTION

Toe-in:
0±3 mm (0±0.12 in) (tolerance)

1) Set the toe-in gauge in the position at wheel axis center height behind the right and left front tires.
2) Place a mark at the center of both left and right tires, and measure distance “A” between the marks.
3) Move the vehicle forward to rotate the tires 180°.

NOTE:
Be sure to rotate the tires in the forward direction.

4) Measure the distance “B” between the left and right marks. Find toe-in using the following equation:

A – B = Toe-in

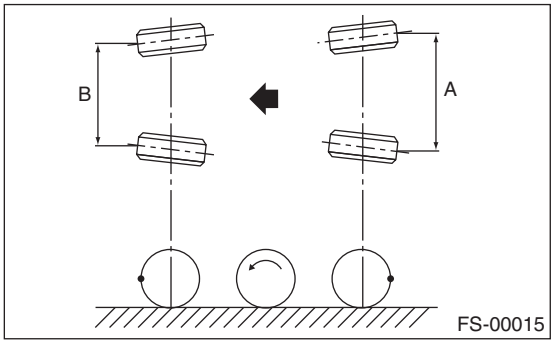

ADJUSTMENT

1) Check that the left and right wheel steering angles are within specification.
2) Loosen the left and right side steering tie-rod lock nuts.
3) Turn the left and right tie-rods by equal amounts until the toe-in is at adjustment standard.

Toe-in:
0±2 mm (0±0.08 in) (adjustment standard)

Both the left and right tie-rods are right-hand threaded. To increase toe-in, turn both tie-rods clockwise by equal amount (viewing from the inside of vehicle).

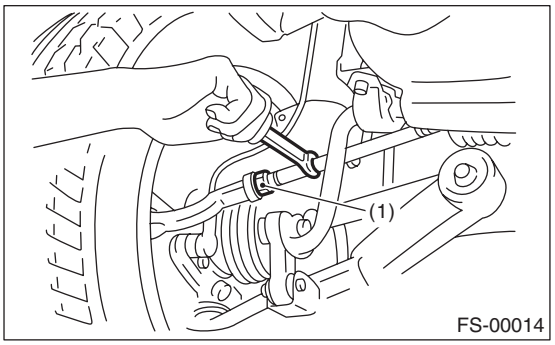

(1) Lock nut

4) Tighten the tie-rod lock nut.

Tightening torque:
Non-turbo model:
83 N·m (8.5 kgf-m, 61.5 ft-lb)
Turbo model and STI model:
85 N·m (8.6 kgf-m, 62.2 ft-lb)

NOTE:
Check and correct the tie rod boot if twisted.

6. REAR WHEEL TOE-IN

INSPECTION

Toe-in:
0±3 mm (0±0.12 in) (tolerance)

Refer to FRONT WHEEL TOE-IN for rear toe-in inspection procedures.
<Ref. to FS-10, FRONT WHEEL TOE-IN, INSPECTION, Wheel Alignment.>

ADJUSTMENT

1) Loosen the self-locking nut on the inner side of link rear.

NOTE:
When loosening or tightening the adjusting bolt, hold the bolt head and turn the self-locking nut.

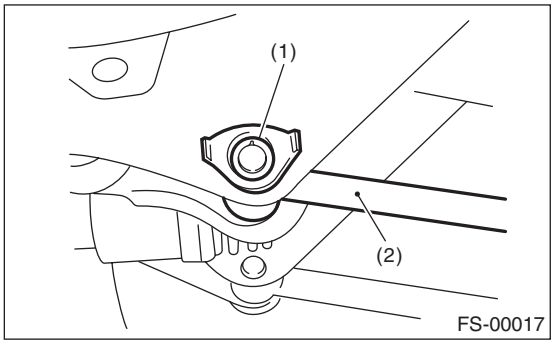

(1) Adjusting bolt
(2) Link rear

2) Turn the adjusting bolt until toe-in is at adjustment standard.

Toe-in:
0±2 mm (0±0.08 in) (adjustment standard)

NOTE:
When the left and right wheels are adjusted for toe-in at the same time, the movement of one scale graduation changes toe-in by approx. 1.5 mm (0.6 in).

To increase toe-in:	
Rotate the left side clockwise.	Rotate the right side counterclockwise.
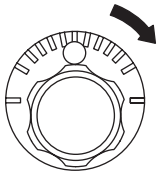 FS-00018	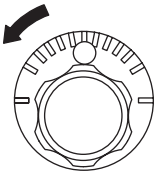 FS-00019

To decrease toe-in:	
Rotate the left side counterclockwise.	Rotate the right side clockwise.
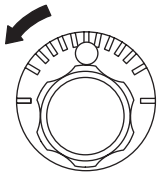 FS-00019	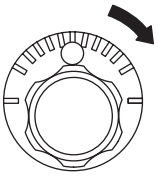 FS-00018

3) Attach and tighten a new self-locking nut.

Tightening torque:
100 N·m (10.2 kgf-m, 74 ft-lb)

7. THRUST ANGLE

INSPECTION

1) Place the vehicle on a level surface.
2) Move the vehicle 3 to 4 meters (10 to 13 feet) straight forward.
3) Draw the center of loci for both the front and rear axles.
4) Measure distance “L” between the center lines of the axle loci.

Thrust angle
0°±30′ (tolerance)
Less than 30′ when “L” is 22 mm (0.9 in) or less.

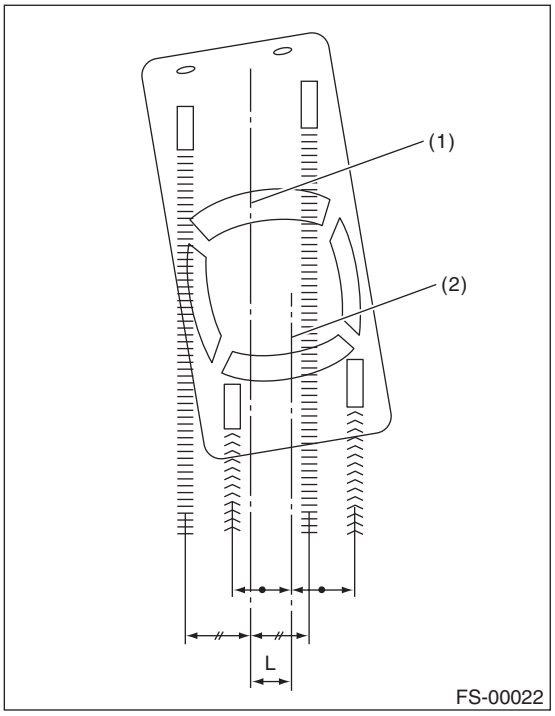

(1) Center line of loci (front axle)
(2) Center line of loci (rear axle)

ADJUSTMENT

1) Make thrust angle adjustments by turning the toe-in adjusting bolts of the rear suspension equally in the same direction.
2) When one rear wheel is adjusted in a toe-in direction, adjust the other rear wheel equally in toe-out direction, in order to make the thrust angle adjustment.
3) When the left and right adjusting bolts are turned by one graduation, the thrust angle will change approx. 16′ (“L” is approx. 12 mm (0.472 in)).

Thrust angle
0°±20′ (adjustment standard)
Less than 20′ when “L” is 13 mm (0.51 in) or less.

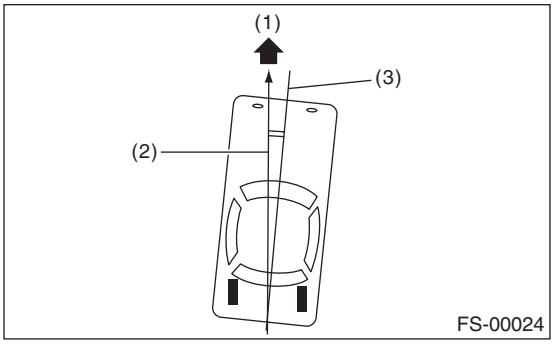

(1) Front
(2) Thrust angle
(3) Body center line

NOTE:
Thrust angle is a mean value of left and right wheel toe angles in relation to the vehicle body center line. Vehicle is driven straight in the thrust angle direction while swaying in the oblique direction depending on the degree of the mean thrust angle.

Thrust angle: $r = (\alpha - \beta)/2$
α: Rear RH wheel toe-in angle
β: Rear LH wheel toe-in angle
Substitute only the positive toe-in values from each wheel into α and β in the equation.

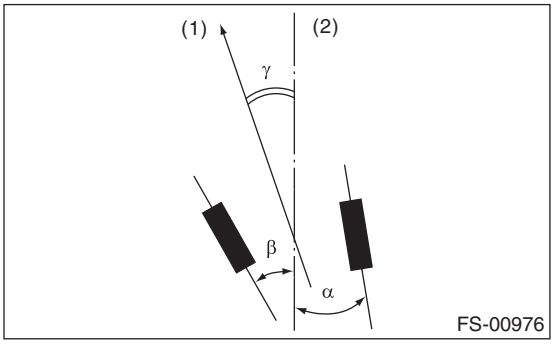

(1) Front
(2) Body center line